F-800 / F-800B

Facial Steamer

User Manual

Welcome to use our products. A4
Please read the user manual carefully before using the products.
Our company reserves the right to improve design and modify
the products without prior notice.

About This Manual

This manual shall only be used for the reference of operation of this particular model. If the manual is used for other purposes, we will not undertake any according consequences and responsibility.
All information of this manual shall be protected by copyright and shall not be copied and translated in any part of this specification without the written consent of manufacturer.

Security Guidance

To ensure that you use the product correctly, please read all the security guidance carefully before use. This security guidance can help you use this product correctly to avoid harm to you and your family, and unnecessary property damage. When using this product, especially when a child is present, basic protective measures must be taken. The security guidance are as follows.

	Warning	**Indicates a potential dangerous situation that, if not avoided, could result in serious loss of life.** • This product must be used in accordance with the inherent purpose stated in this manual and cannot use the accessories, which are not recommended by manufacturer. • The following people should not use: • Women during pregnancy or menstruation People with allergies, skin diseases, or severe sunburn People with skin damage, eczema, swelling, etc. People with limbs, senses, or mental illness People who have just completed surgery and are recovering • When this product is working, do not wind the power cord around the body, and do not use an extended power cord. • When using and placing, the power cord must be kept away from high temperature. • When this product is powered on, it must not be left unattended. • When the power cord and plug of this product are damaged, work abnormally, overturned or dropped in water, you cannot continue to use it. You should send it to the service center for inspection and repair. • This product is not recommended for children. • Do not insert or put any foreign objects into the body and nozzle of this product. • When the steamer alarm sounds, must immediately turn off the power, unplug the power cord, to prevent the danger of water spraying, do not continue to use the steamer before troubleshooting.
	Notice	Indicates a dangerous situation that may occur. If it is not avoided in time, it may cause personal injury and property damage in severe cases. • Do not insert or put any foreign objects into the body and nozzle of this product. • Please keep this product properly and keep it out of reach of children. • When using, do not remove the water cup. • Do not touch the herbal cap during work.
	Dangerous (avoid electric shock)	• Unplug the power cord immediately after use. • Do not use this product while bathing. • Do not place or store this product in a location that can easily fall into the bathtub, washbasin, sink, etc. • Do not allow water or other liquids to enter the product due to improper operation. • If the product falls into the water accidentally, please do not touch the product and unplug the power cord immediately. • Do not use this product in a humid environment.
	High Temperature Attention	When working with this product, please pay attention to high temperature parts such as nozzle and herbal cap to avoid scald.

Parts List

F-800

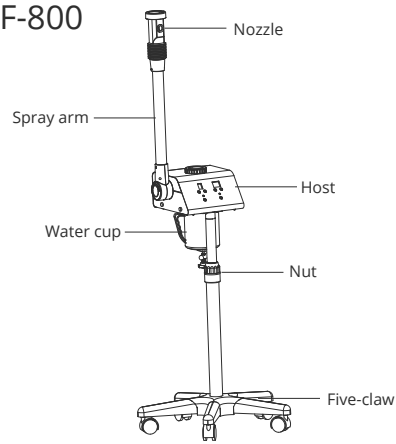

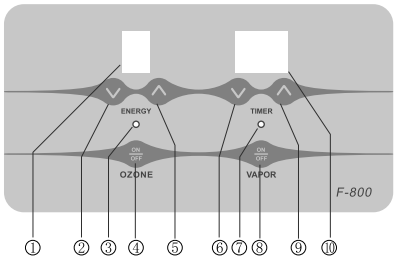

① Energy display
② Energy decreasing button
③ Ozone indicator light
④ Ozone switch ON/OFF
⑤ Energy increasing button
⑥ Time decreasing button
⑦ Heater indicator light
⑧ Spray switch ON/OFF
⑨ Time increasing button
⑩ Timer display

Product Parameters

Model	F-800	
Rated voltage & frequency	AC 100-120V,50/60Hz	AC 220-240V,50/60Hz
Rated Power	580W	880W
Net weight	7.5kg	
Package size	97.5×33×34.5cm	
Inside the package		
Host ×1	Plate ×1	
Herbal cap ×1	M10 flat gasket ×1	
Herbs filter mesh ×1	M10 spring pad ×1	
Water cup ×1	M10 screw ×1	
Seal ring ×1	Power line ×1	
Small steel cup ×1	Adjustable tube ×1	
Spanner ×1	Sliding tube ×1	
Five-claw ×1	User Manual ×1	
Wheel ×5		

Parts List

F-800B

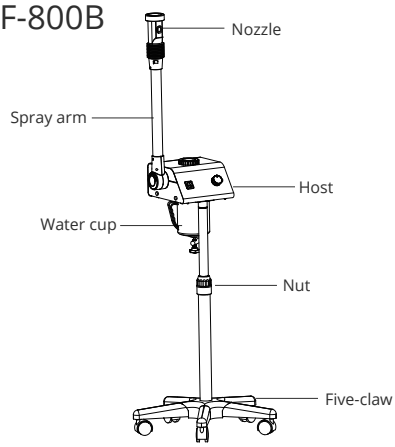

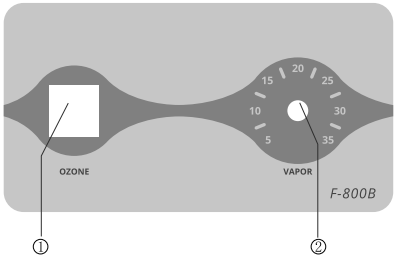

① Ozone switch ON/OFF
② Hot Spraying Time Adjustment Button

Product Parameters

Model	F-800B	
Rated voltage & frequency	AC 100-120V,50/60Hz	AC 220-240V,50/60Hz
Rated Power	580W	880W
Net weight	7.5kg	
Package size	97.5×33×34.5cm	
Inside the package		
Host ×1	Plate ×1	
Herbal cap ×1	M10 flat gasket ×1	
Herbs filter mesh ×1	M10 spring pad ×1	
Water cup ×1	M10 screw ×1	
Seal ring ×1	Power line ×1	
Small steel cup ×1	Adjustable tube ×1	
Spanner ×1	Sliding tube ×1	
Five-claw ×1	User Manual ×1	
Wheel ×5		

Base Installation

1. Install the five-claw base. (As shown in illustration)

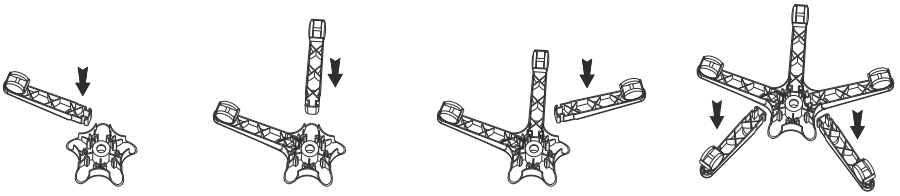

01 02 03 04

2. Fix the plate on the five-claw with M10 screw bolt. Please pay attention to the installation order of gaskets .(please refer to picture No.05)

3. Insert the tube into the five-claw and use spanner to fix the M10 screws. (please refer to picture No.06)

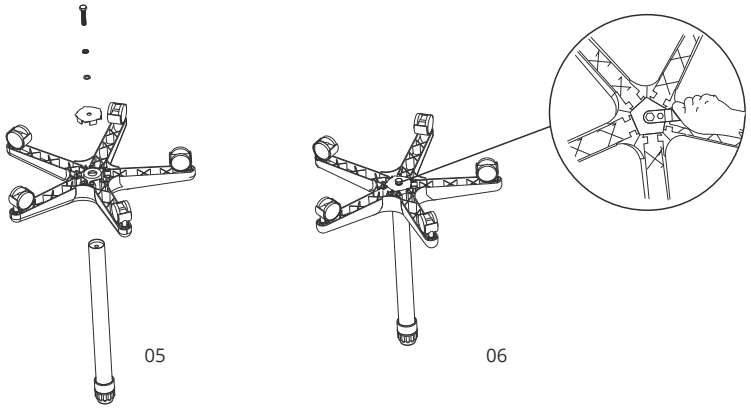

05 06

Tube Installation

1. Remove the nut.(please refer to pictures No.07,08)

2. Insert the sliding tube into the adjustable tube.(please refer to picture No.09)

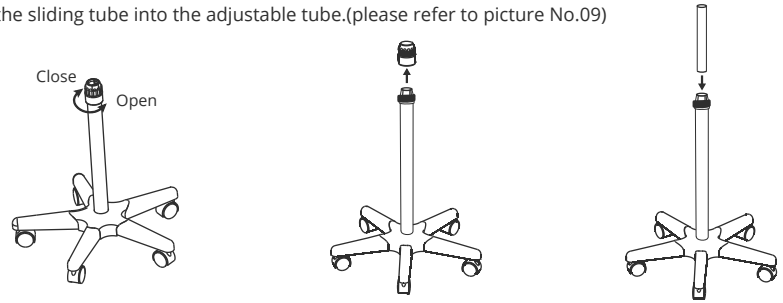

07 08 09

3. Insert the nut.(please refer to picture No.10)

4. Press the sliding tube to its lowest position and then tighten the nut.(please refer to the pictures No.11)

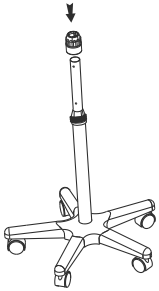

10

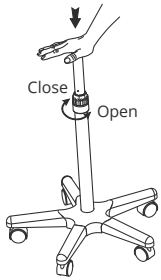

11

Warning When adjust the height of the sliding bar, first you should hold the sliding bar with one hand, then adjust the adjustment thimble with another hand. Please do not hold the nozzle of the sliding bar to face yourself or others, so as to avoid getting hurt if the sliding bar springs out.

Water Cup Installation

1. Twist the water cup tray to a suitable place that can hold the water cup and then push it backward.
2. Place the seal ring on the water cup.
3. Place the water cup into the mainframe, and push the tray back and then tighten it.
(please refer to the pictures No. ① & ②)

①

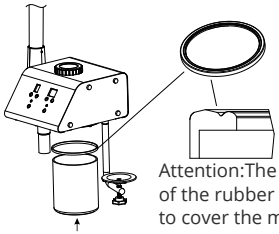

Attention:The opening direction of the rubber ring is downward to cover the mouth of the cup

②

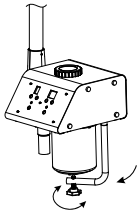

Warning The water cup is designed specially for this series steamer. Please do not use other similar water cups to place into this steamer, for the similar water cups will leak the gas or water easily and cause accidents.

Host Installation

Insert the host into the sliding tube.(please refer to the picture No. ① & ②)

①

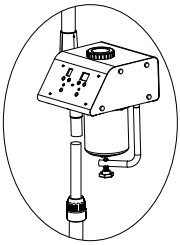

②

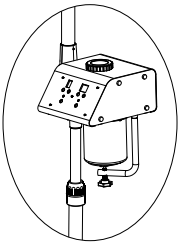

Operation Method

Operation Precautions

Cautions

- Do not work under direct sunlight for a long time, or it may cause a variety of unstable conditions of the machine.
- It is forbidden to use facial steamer in sleeping.
- Forbid to insert or drop anything into facial steamer.
- Only be used indoor, not outdoor.
- When fill water to steamer, shall pull out the plug. The steamer can fill water only and shall not exceed the limit.
- Confirm the steamer cooled before move, clean and store it.
- Do not touch high temperature part, like nozzle, herbal cap, water cup, etc.
- Can only add clean water. Forbid to add herbs or fragrance. Otherwise, it is easy to cause water spray and damage the steamer.
- Do not spray the spray directly from the top of the face. Otherwise, it may cause scald.
- Forbid to conduct the probe to the probe. Otherwise, it will affect the normal work.
- Forbid to open up the machine by oneself. If there is anything unusual, please consult the dealer, and send to professional technicians for inspection.
- If the power cord is damaged, it must be replaced by its manufacturer or maintenance department or similar professionals to avoid danger.
- Forbid to modify heating coils and other parts of steamer.
- Do not open the cap during heating and within 1 minute of heating. Otherwise, it may cause scald.

Do not use distilled water.

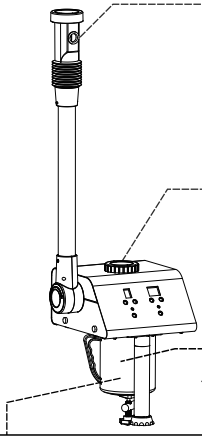

Warning

- Forbid to spray vapor to same place for long, or directly down to the client's face too closely, otherwise, it will cause scald.
- Do not spray the spray directly from the top of the face. Otherwise, it may cause scald.

Warning

- Only clean water can be added, do not add essential oil, herbs, etc
- When adding water, pick up the herb pack to prevent water contamination (for steamer with herb basket).
- Do not remove the cover during heating and within 1 minute after heating to prevent burns.
- When "Beep" alarm sounds, turn off the power immediately, stop using the steamer and clean it according to the methods shown in this manual to prevent the danger of spraying water!

MAX (highest water level)

When working, pay attention to the boiling water level. When it is higher than the upper limit, stop the steamer immediately to change water or reduce the water level.

Warning

- Only clean water can be added to the water cup. Do not add essence, herbal medicine, other viscous substances and any additives to the water cup, otherwise it will cause water spraying and damage to the instrument.
- When working, pay attention to the boiling water level. When it is higher than the upper limit, stop the machine immediately to change water or reduce the water level.
- Please clean the scale of heating components and water cups at least once a week to avoid spraying water.
- Pour out the remaining water in the water cup to avoid the accumulation of grease and other residues after use.

Attention

- If you need to adjust the height of machine, you should hold tightly the sliding bar with one hand, and twist the adjustment thimble with another hand. Please do not hold the nozzle of the sliding bar to face yourself or others, so as to avoid getting hurt if the sliding bar springs out.
- The water cup should be place appropriately. Please pay attention to the position of the rubber ring, which can not be rolled up or folded; otherwise, it will leak due to the deformed plastic ring.
- The herbal packs must be removed before adding water. Otherwise, it may cause scald. The herbal packs can be used up to 2 times.
- The water level should be between the “MAX” and “MIN” level limit, when the machine is at work.
- When add water to the water cup, try to avoid spilling water over the surface of the machine shell, otherwise, it will probable cause electric leakage.
- If air or water leakage occurs during working, first switch off the “POWER” button immediately, and cut off power, then take off water cup and check whether the rubber ring is properly fixed, reinstall it. If nothing is improved, please consult the sales agent.
- When operating the machine, nozzle must not aim at client’s face until the vapor sprays out thinly
- and evenly, keep a distance of 30-35 cm from the face, vapor should spray firstly from client’s jaw, then all over the face.
- Since the ozone can kill the skin bacteria, it is not good to use for a long time; otherwise, it will harm the skin and decompose herbs’ nutrition. The period of using time should be based on different types of skin.
- During working, when water level falls below the MIN limit, there is no more water into the water cup. It will automatically response immediately and turn off the heater, lock up all the keys except the“VAPOR” key and accompany with alarming by buzzing constant. It won’t start to work until the water is added to the normal level, and then repress the key to proceed the operation.
- Water level:
  Ensure the water stay between the high and low water lines.
- Electric leakage:
  When adding water, do not drop water on the power switch to avoid electric leakage.
- Air leakage:
  When air leakage during operation, turn off the power first. Pad your hands with a dry towel and fasten the water cup in clockwise. If problem is still not solved after above operation, stop to use the steamer and contact dealer to solve it.
- Over water level alarm: when the steamer is heating, if the water quality is abnormal or the bubble is too full, the machine will make a long alarm sound, and automatically turn off the heating and UV lamp; at this time, the power supply must be turned off immediately and the power cord must be unplugged, do not continue to use the steamer; (When the water or bubbles return to normal level, the steamer will automatically exit the alarm.)
- Solution for over water level alarm: When the steamer alarms, turn off the power switch immediately and unplug the power cord. After the water in the water cup cools down, pour out all the water, and clean the atomization chamber(black plastic part fixing the UV lamp), water cup and electric tube before using the steamer again.

Choose different spray distance and times base on various skin condition

Skin types(remedy suits case)	Distance	Time
Greasy skin,poor blood circulation	30-35 cm	About 15 min
Normal or combination skin	30-35 cm	About 10 min
Dry skin	30-35 cm	About 5 min
Sensitive skin	35 cm	About 5 min
Pigmented skin	40 cm	About 10 min

◆ Operation Procedure

1. Place the water cup upon the water cup tray and then tighten the screw. Then take the herbal cap lid up and pour the clean water into the water cup. The water level should be between the MAX and MIN limit of the cup.(please refer to pictures No.① & ②)

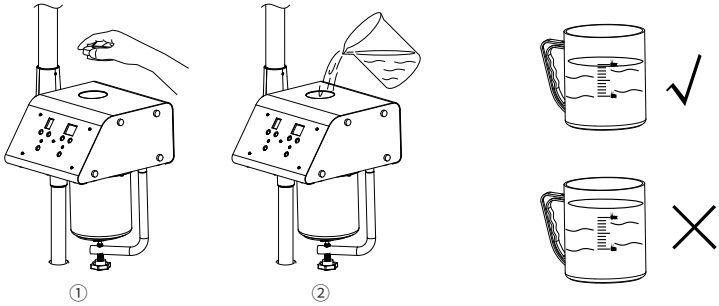

2. For herbs treatment, please take out the filter mesh, put the herbs bag into the small steel cup, then place the filter mesh and herbal cap back. (please refer to pictures No.③)

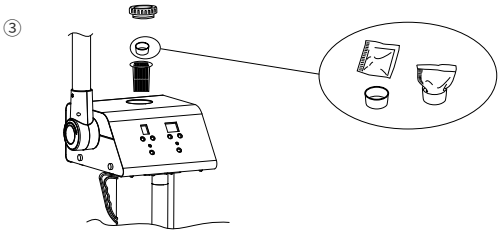

3. For fragrance treatment, please drop some essential oil in the balsam case in the spray head.
The spray head can be adjusted at an appropriate angle. (please refer to pictures No.④)

④

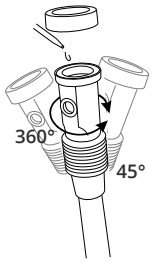

4. Connect the power plug.

5. Automatic inspection function after opening the steamer. Press “VAPOR, the green indication light on the left will be on. The timer will indicate “15” minutes. Energy will indicate “0”.The mainframe can check the water level in the bottle automatically. If the water level is between the MAX and MIN level, then the mainframe will standby. If the water level is lower than the MIN level, the mainframe will beep, and lock all buttons except for the “VAPOR” button.

6. Five level spray output
Press “+” or “-“ keys under “Energy” to adjust the spray output from “0-5”. “5” is the biggest output. Before the vapor sprays out of the pipe, we suggest to choose “5” first, then adjust the output level according to different requirements.

7. Time setting
Press “+” or “-“ keys under “TIMER” to set time which range is from “0-99” minutes. Default time is “15” minutes once the instrument's power is on.

8. The function of Ozone to kill the bacteria
Switch on the “OZONE” key. --Green lamp on the top is on. The Ozone lamp is working.
There are is obvious ozone smell in the vapor along with distinct atomization.

9. During operation, when the water level drops to minimum limit, the mainframe will automatically response and turn off the heater, lock up all the keys at the same time except for the “VAPOR” key and accompany with alarming by constant buzzing sound. Besides, it won't work until the water is added to the normal level, press the button to proceed the operation

10. After the preset working time is up, the mainframe will switch off “VAPOR” key automatically and buzz 5 times, and the preset time resumes to 15 min. The mainframe stands by and won't work under this status.

◆ Buzzer Setting (This content is only applicable to model F-800)

1.While the steamer is completely off (main switch on the back is in off position), push simultaneously the Ozone and the Vapor buttons and turn on the main switch :

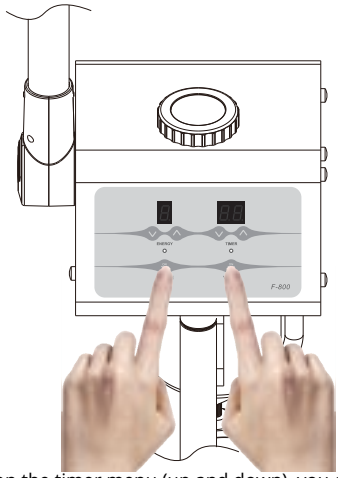

2.By pushing the arrows on the timer menu (up and down), you can choose “of” (turn the sound off) or “on” (turn the sound on):

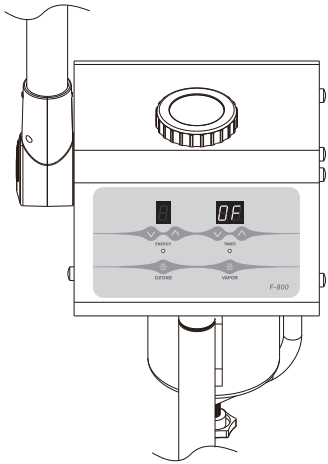

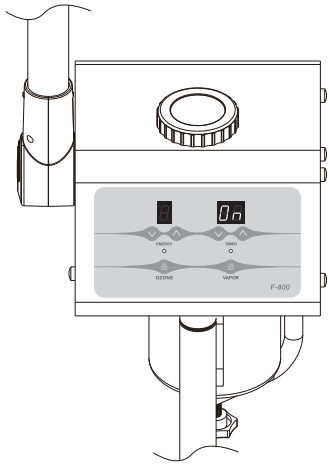

3.Then push the Vapor button to turn off the steamer. Turn it on again.
If you chose the “off” option, the beeping is removed. If you chose the “on” option, the beeping remains.

Maintenance

1. Clean the scale off from the water cup and the heater elements at least one time per week.
(Please use water that contains 7% acetic acid or citric acid to clean the scale)
2. Keep eyes on the water level during working.
3. After operation, clear the steamer, avoid stacked greasy stuff and other matters.

Troubleshooting

1. When an abnormality occurs, stop using it immediately and cut off the power supply.
2. After normal power-on, if the product heats up for no reason before the spray function is turned on. Please cut off the power supply and contact dealer for repair.

Abnormal phenomenon	Cause	Solution
The steamer does not work when press the switch button	Power is not connected	Power is not connected
	Do not adjust the energy key	Press energy increasing button
The steamer does not work.	Not powered on	Boot according to the operation procedure
	Water shortage	Add water according to the operation method
	Nozzle clogged	Clean the product according to the maintenance guideline
	Probe can not work properly due to the use of distilled water	Change to clean or pure water
Water spray	Impurities in the water	First, clean the water cup & heating tube with edible vinegar. Then clean them with clean water again.
	The water level exceeds the water level line	Pour off excess water and ensure the water stay between the high and low water lines.
Heating tube has scale	Use tap water for a while	Clean it with edible vinegar
Switch on the “OZONE” switch but no mist.	Ozone tube is broken.	Please contact dealer to solve it.
Make a long alarm sound	When the steamer is heating, if the water or bubble are abnormally full and the UV lamp is immersed, the steamer will make a long alarm sound, and automatically turn off the heating and UV lamp to prevent the danger of spraying water.	When the steamer alarms, turn off the power switch immediately, unplug the power cord. When the water in the water cup cool down, pour out all the water and clean the atomization chamber (black plastic parts fixing the UV lamp), the water cup and the electric tube before using the steamer again.

If problem is still not solved after above operations,
please contact maintenance center or supplier to solve it.

Do not dispose of old or defective appliances in domestic garbage.
This should only be done through public collection points.

▲ Please check the product specification before use. This manual is for reference only. Specifications are subject to change without prior notice.